Hard & Ware

T&RSET9-RR11

Specification:
Solid brass Turn and Release Set
With 5mm Spindle

Finish:
All Standard Finishes avaliable

Included:
X1 Turn & Release Set
5mm Spindle
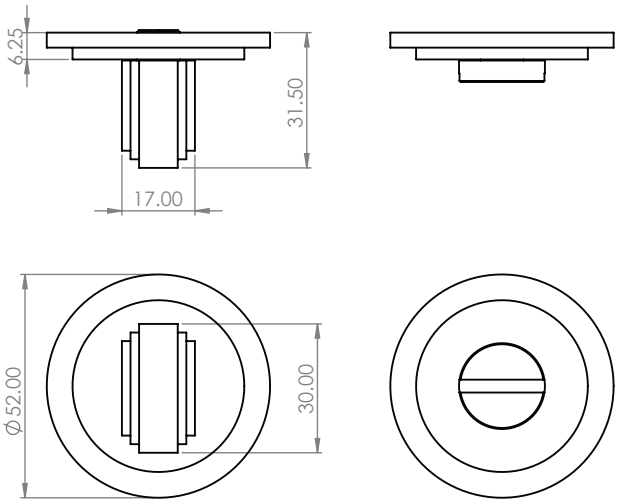
Care Instructions:
Clean wipe with damp cloth. Avoid using any chemicals.
Please note all living finishes are prone to aging & ware